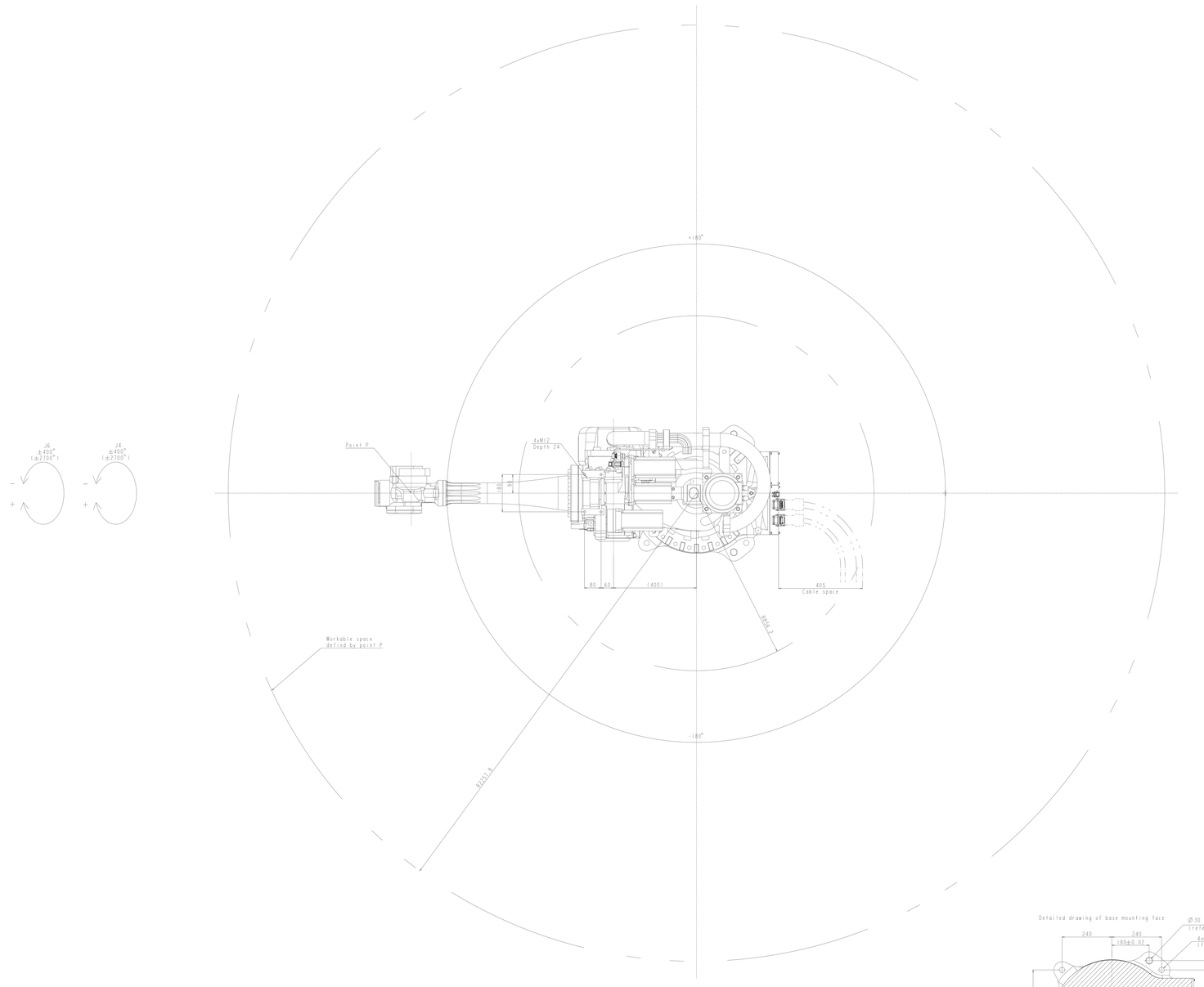

Detailed drawing of base mounting face

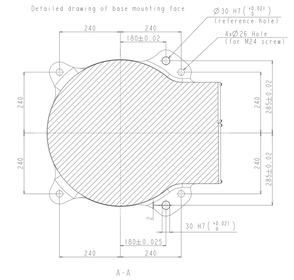

VLA-6025W5

J1=±180°
J2=+125°,-60°
J3=0°,-165°
J4=±400°(±2700°)
J5=±123°
J6=±400°(±2700°)
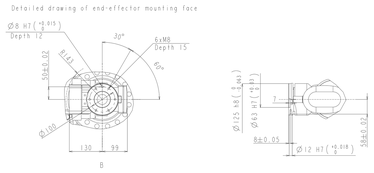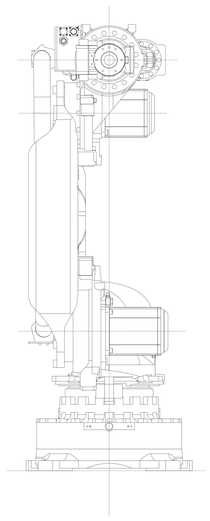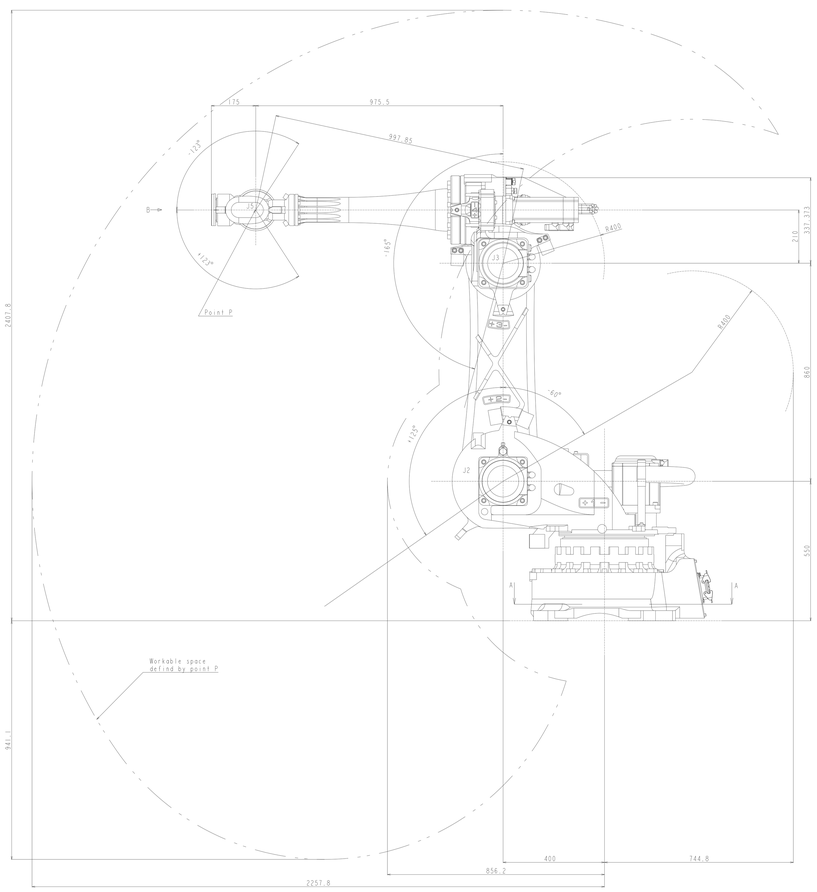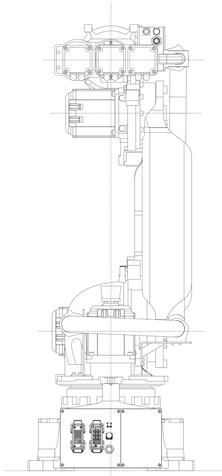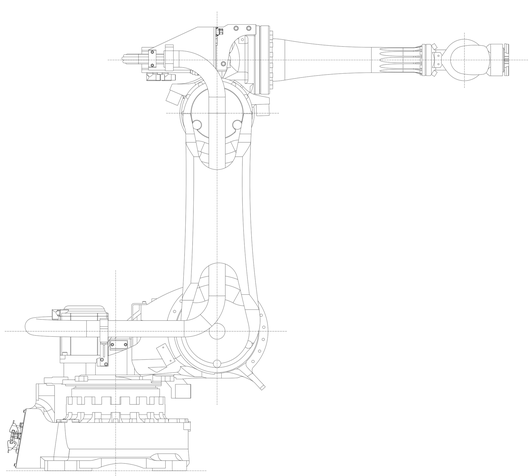
Detailed drawing of end-effector mounting face